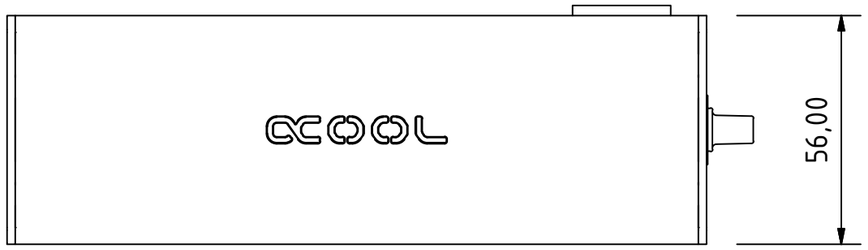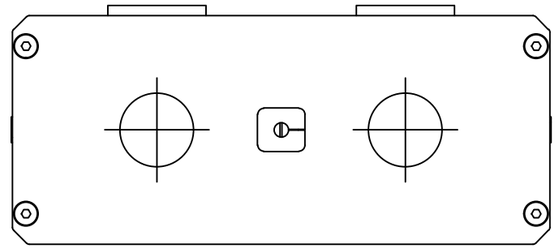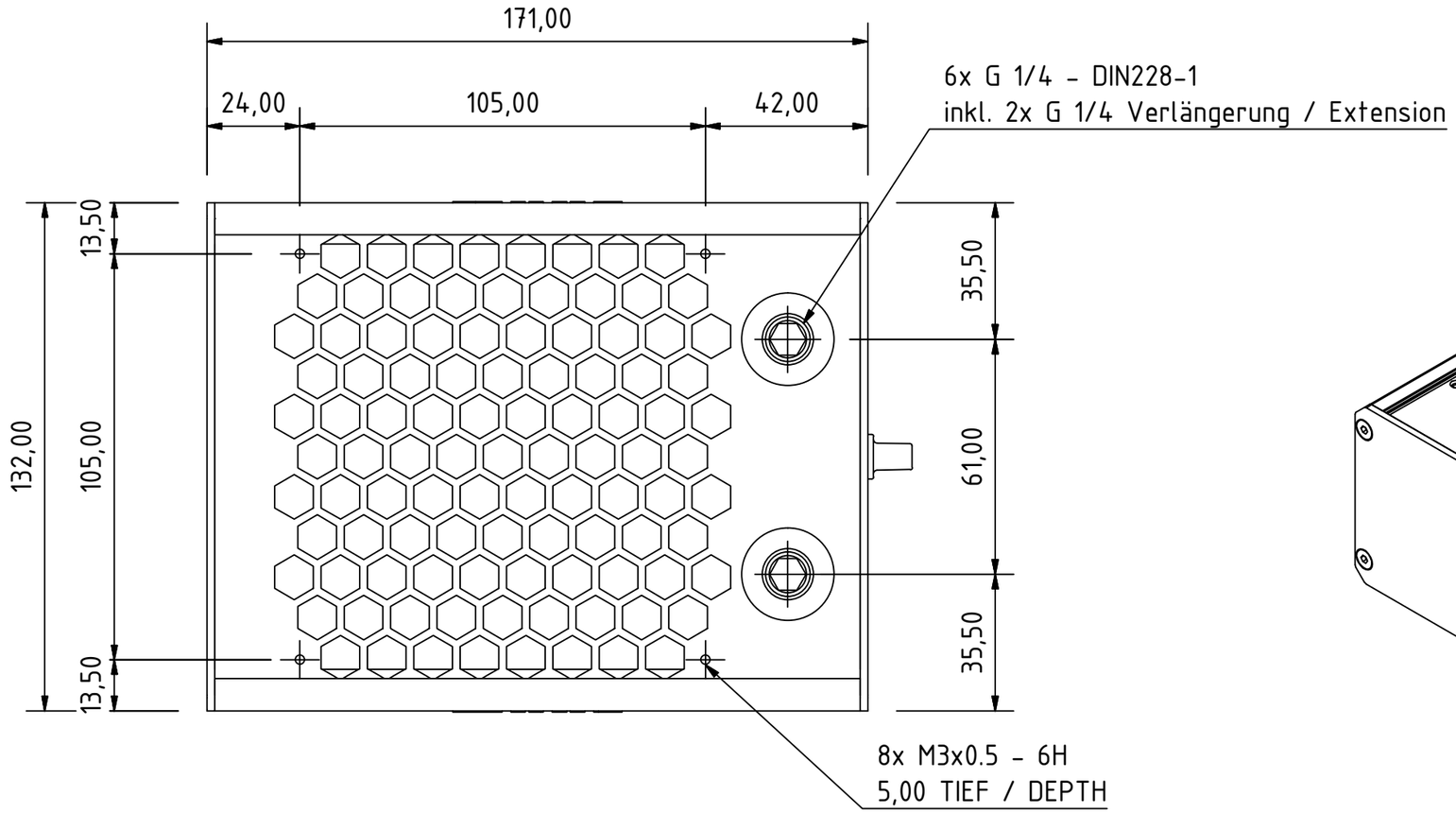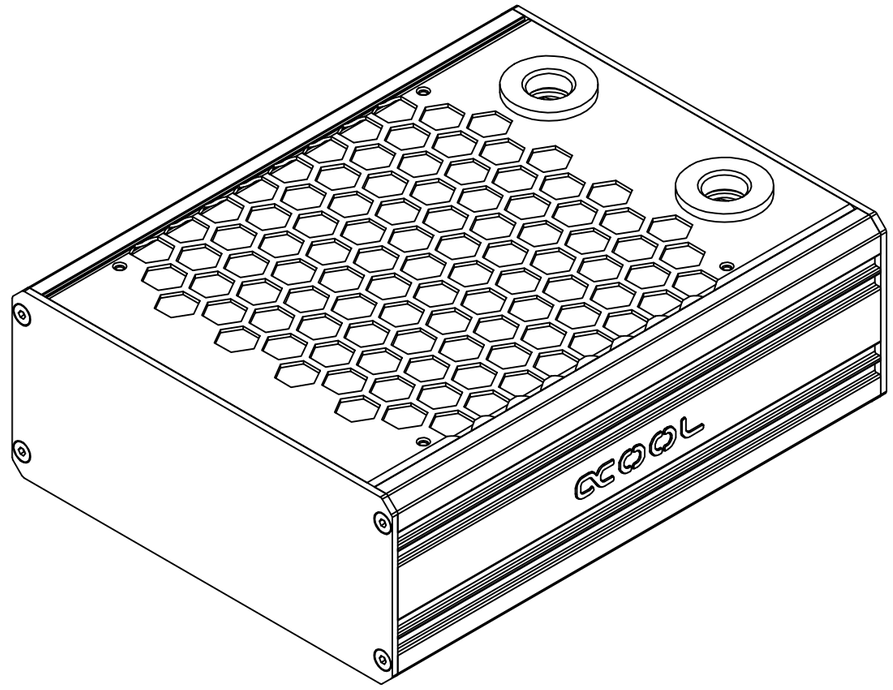Eisbrecher Pro XT45 Full Copper 120mm