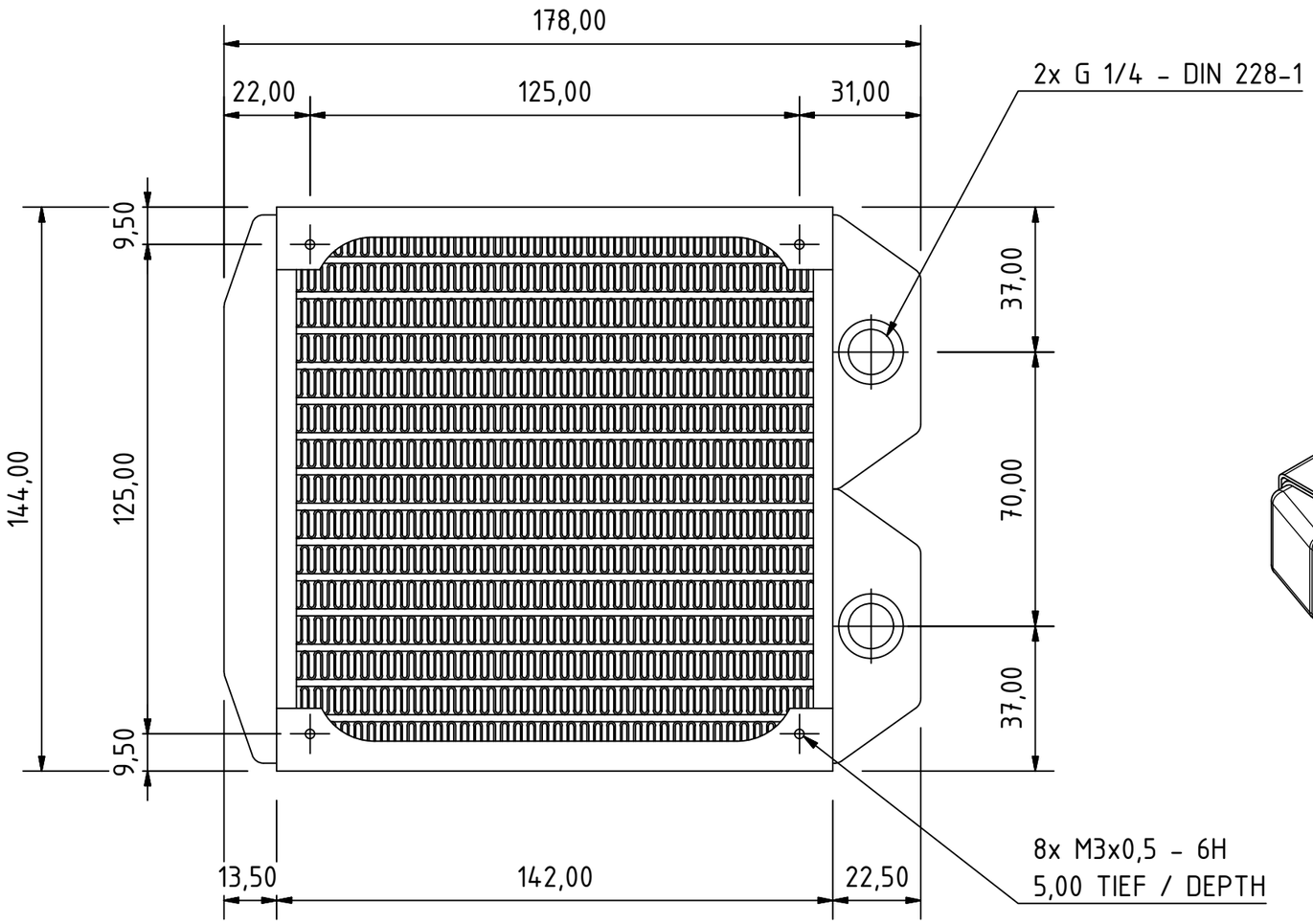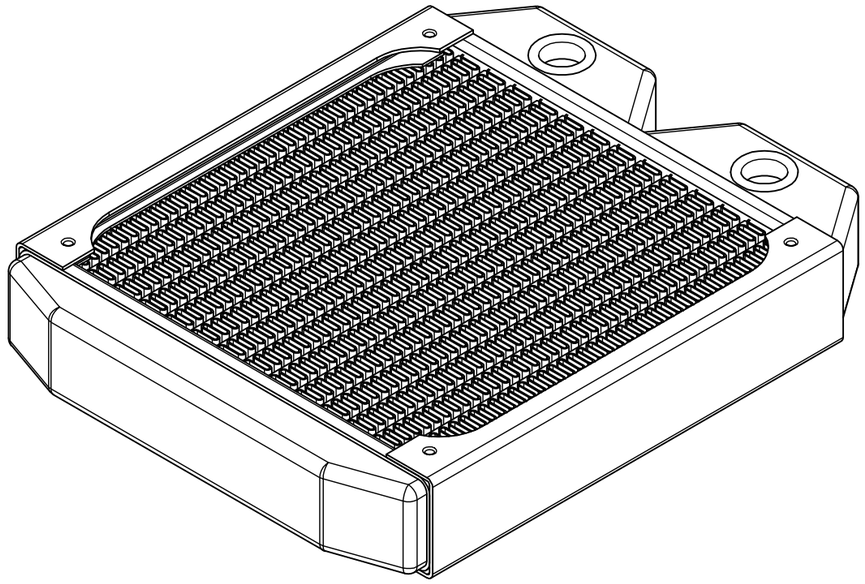NexXxoS ST30 Full Copper 140mm