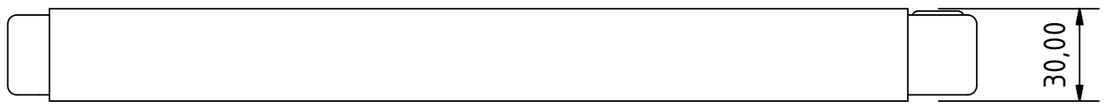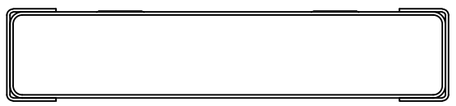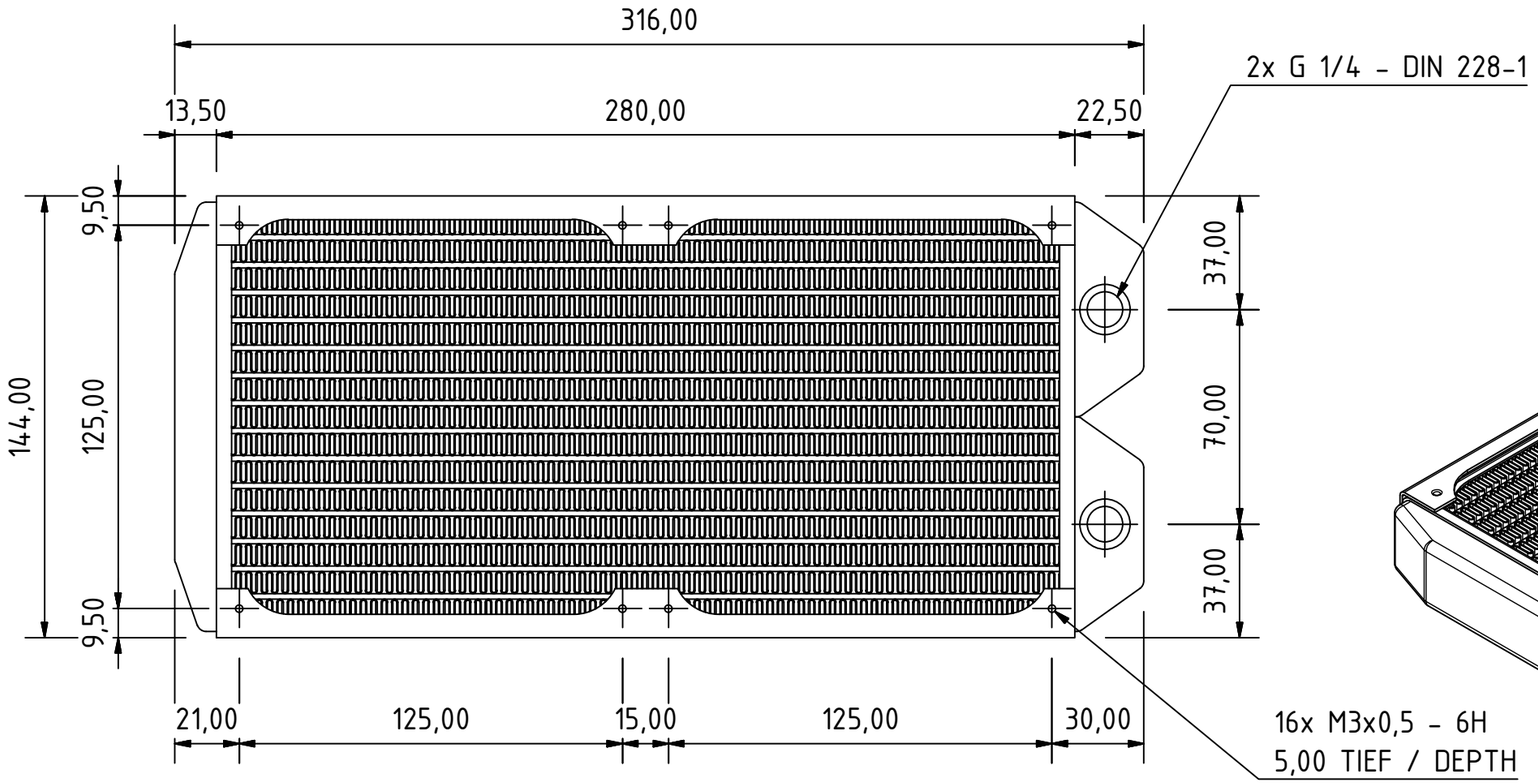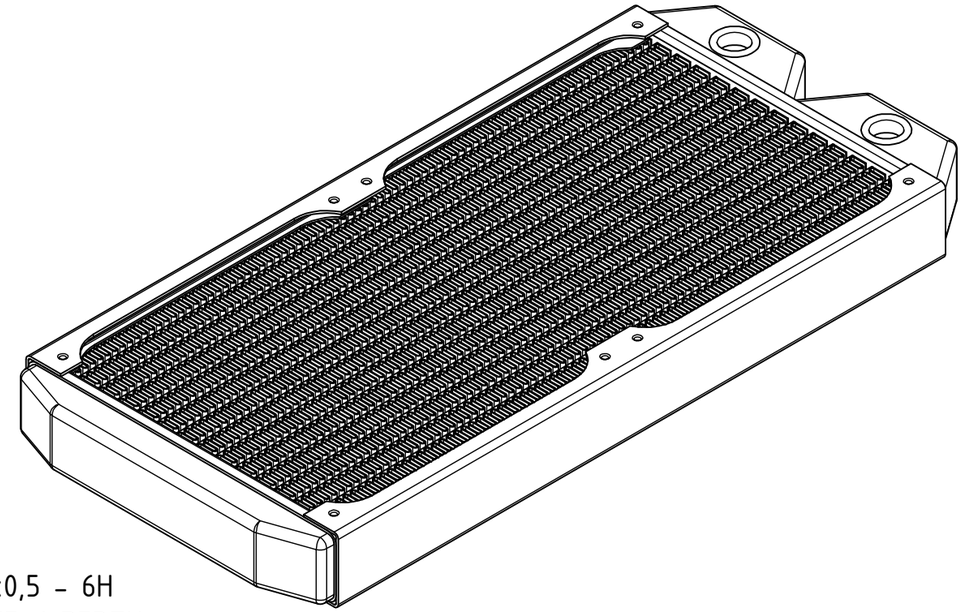NexXxoS ST30 Full Copper 280mm