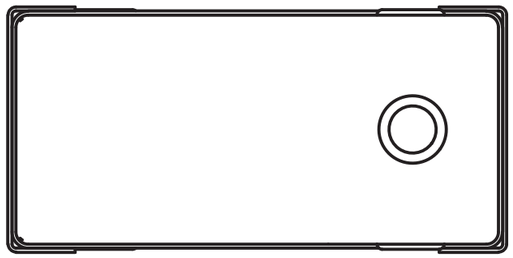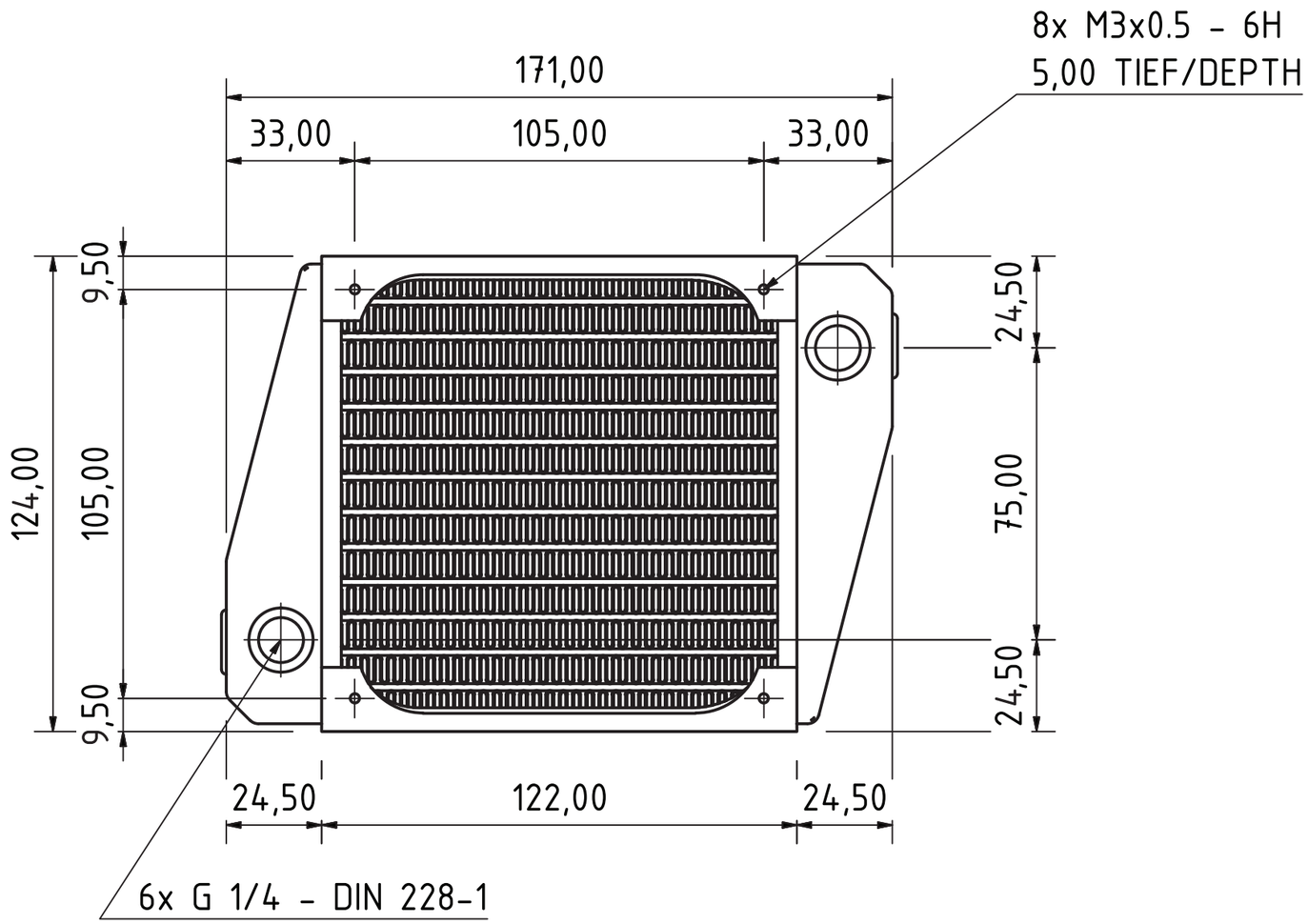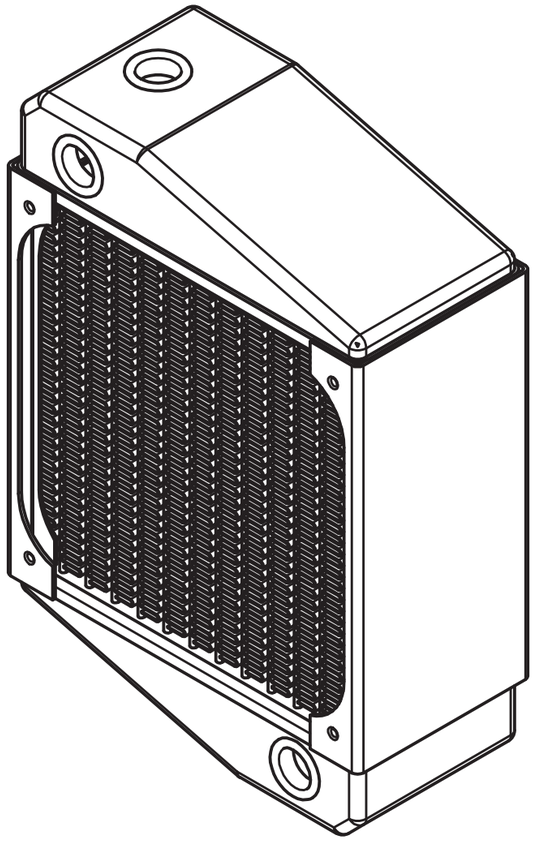NexXxoS UT60 Full Copper X-Flow 120mm