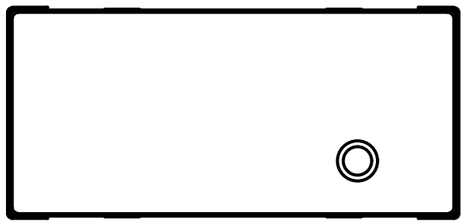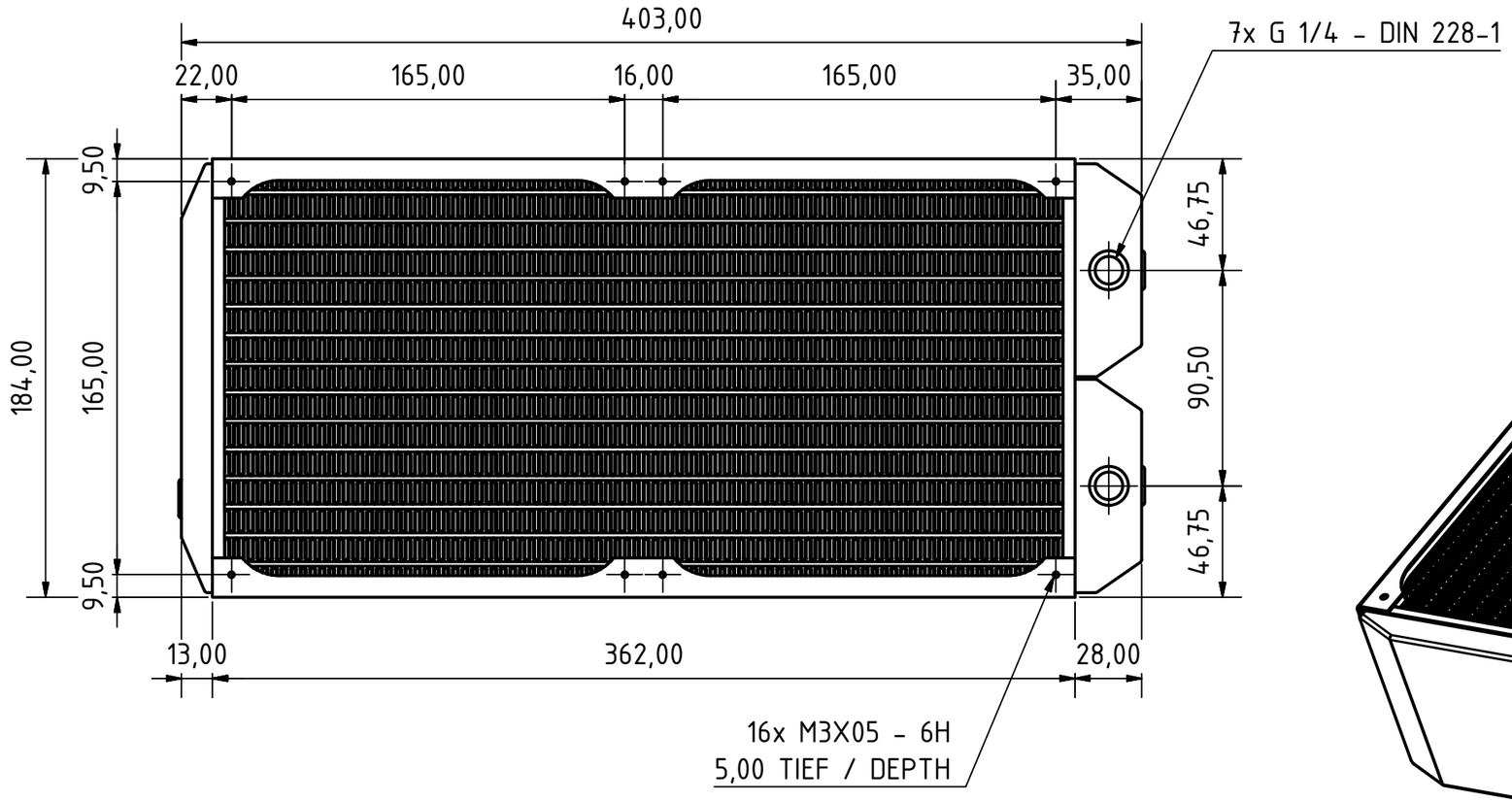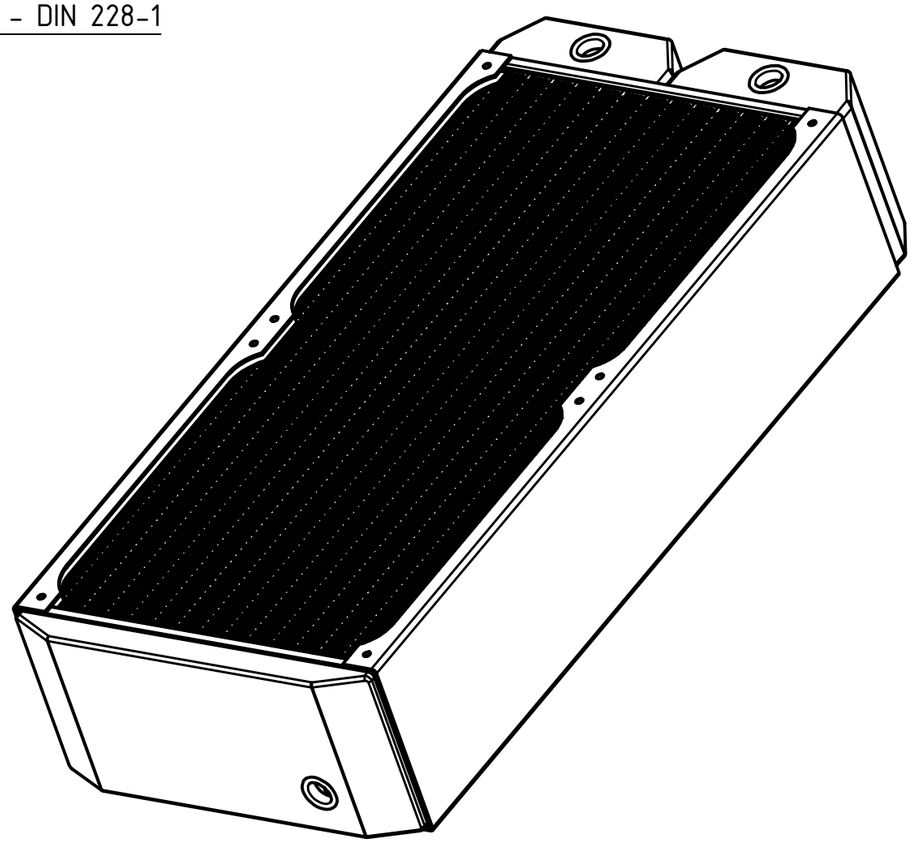NexXxoS Monsta 180mm Dual Radiator