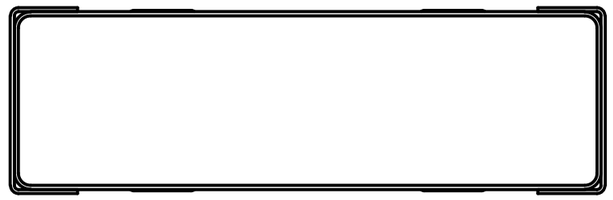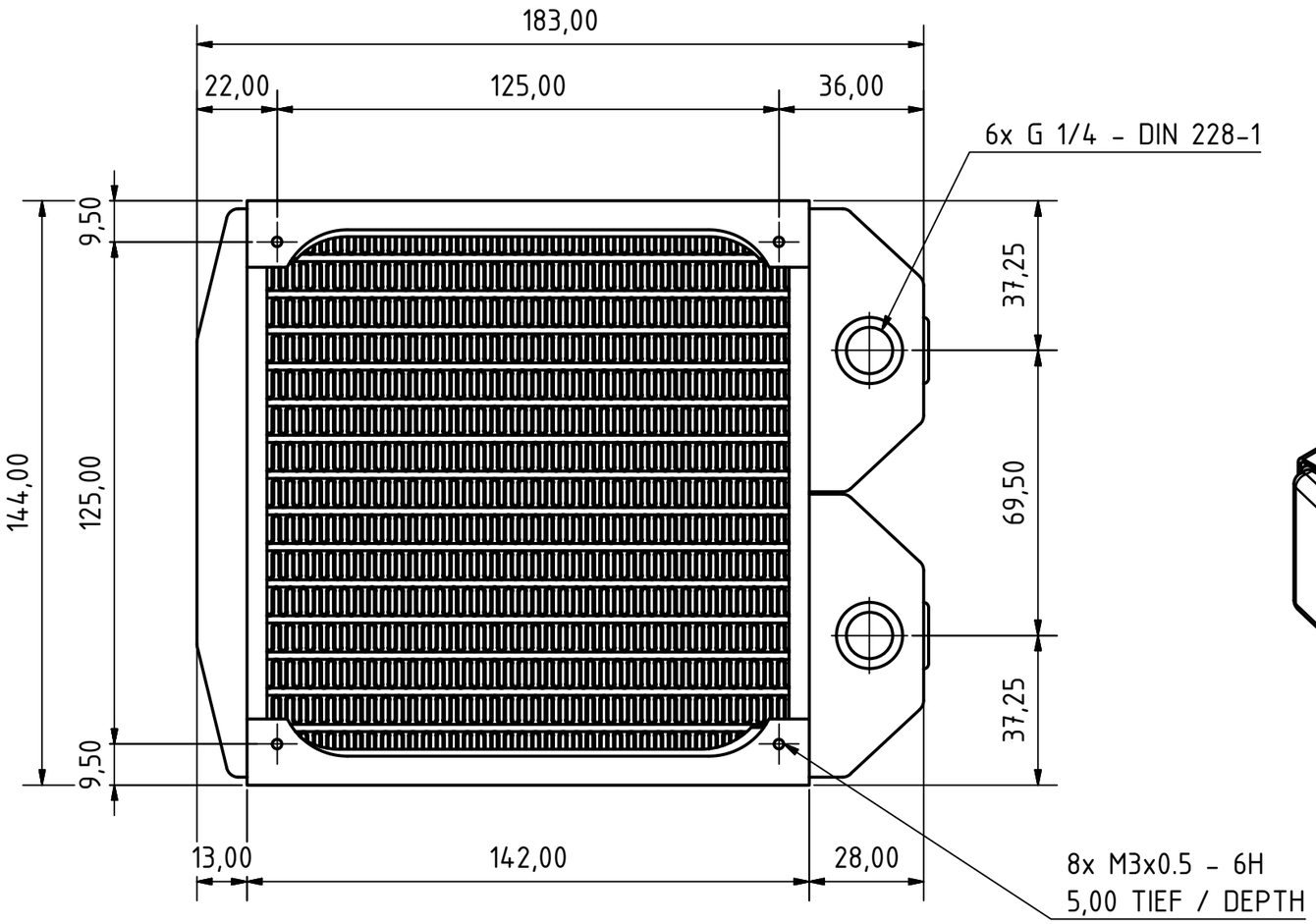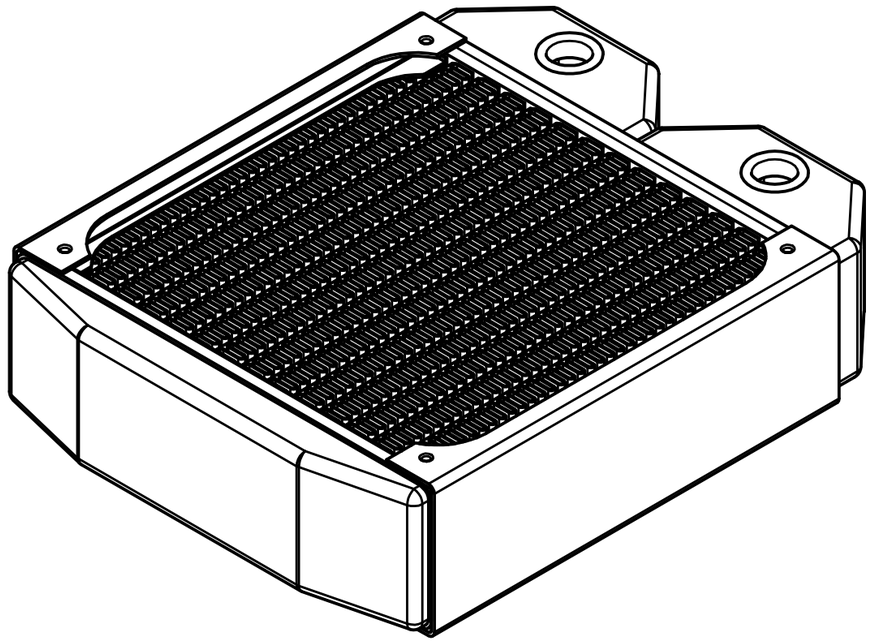NexXxoS XT45 Full Copper 140mm